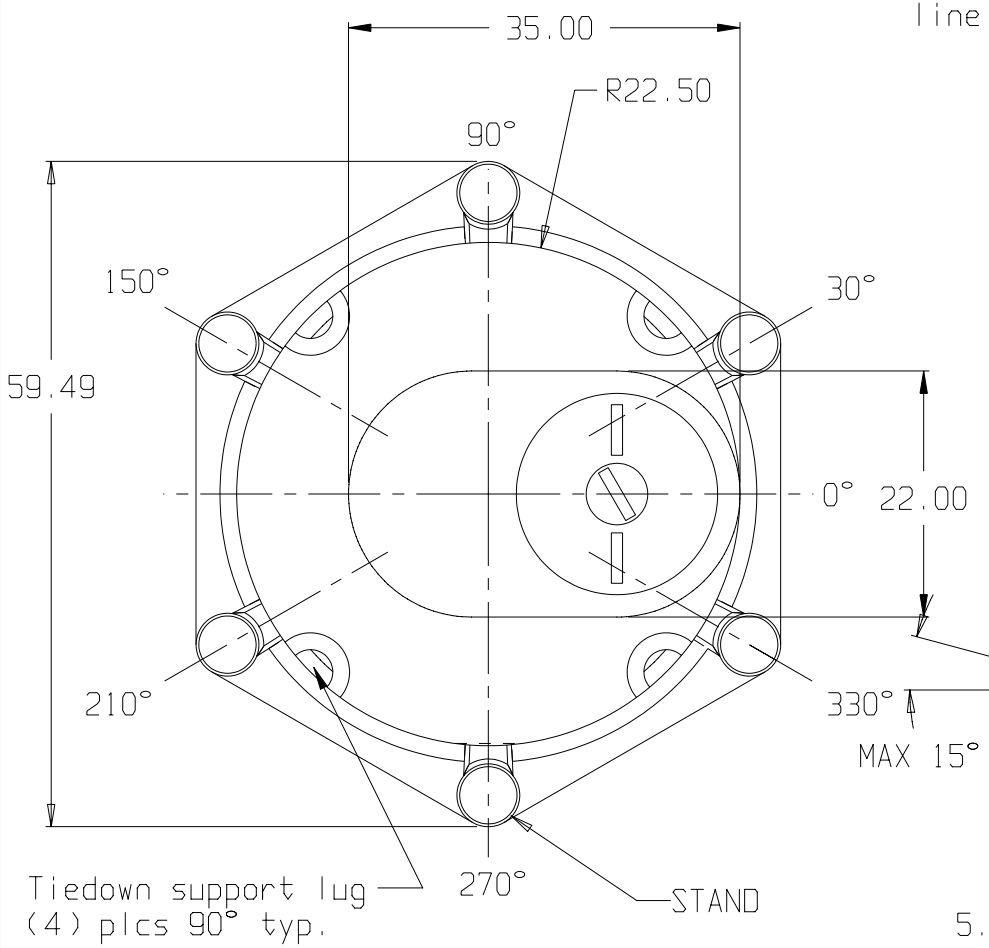

TOP VIEW

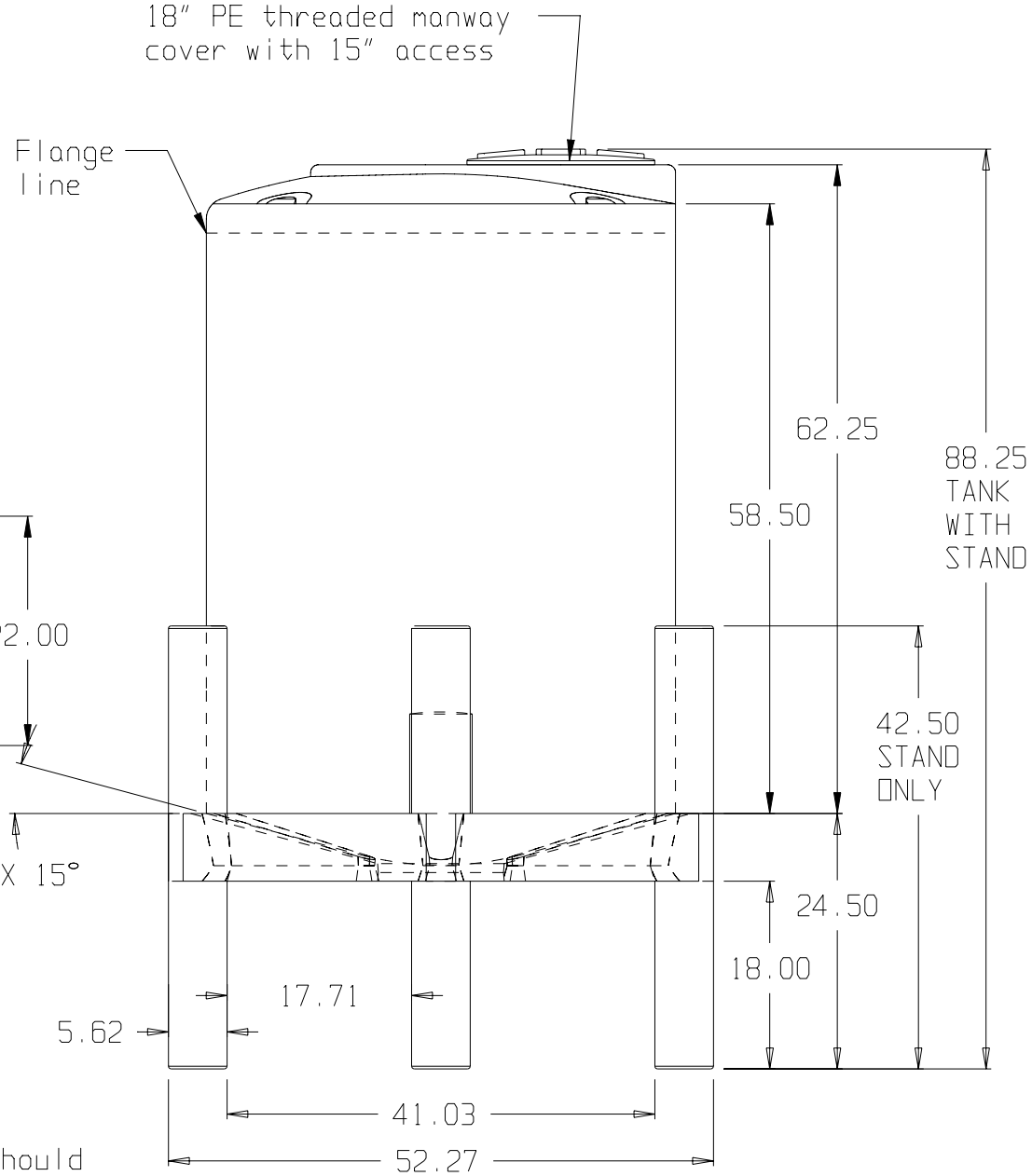

FRONT VIEW

Note:
Tank does not fit securely in stand and the two should not be moved with forklift when tank is loaded.

* BASE FITTINGS TO BE LEFT INSTALLED AT TIME OF SHIPMENT PER SII PROCEDURE
* Consult Snyder's Guidelines for Use and Installation prior to delivery. Available on-line at www.snydernet.com

PATENT #7,059,575
(all dimensions in inches)

SNYDER INDUSTRIES INC.

PART # TANK: 1740100N--
STAND: 1760001N--
REF#: 00000 03/07/05

400 GALLON TOTAL DRAIN TANK W/48"x18" STAND