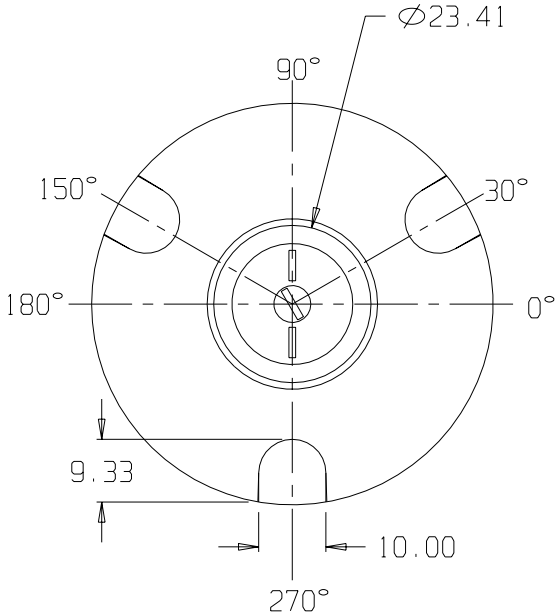

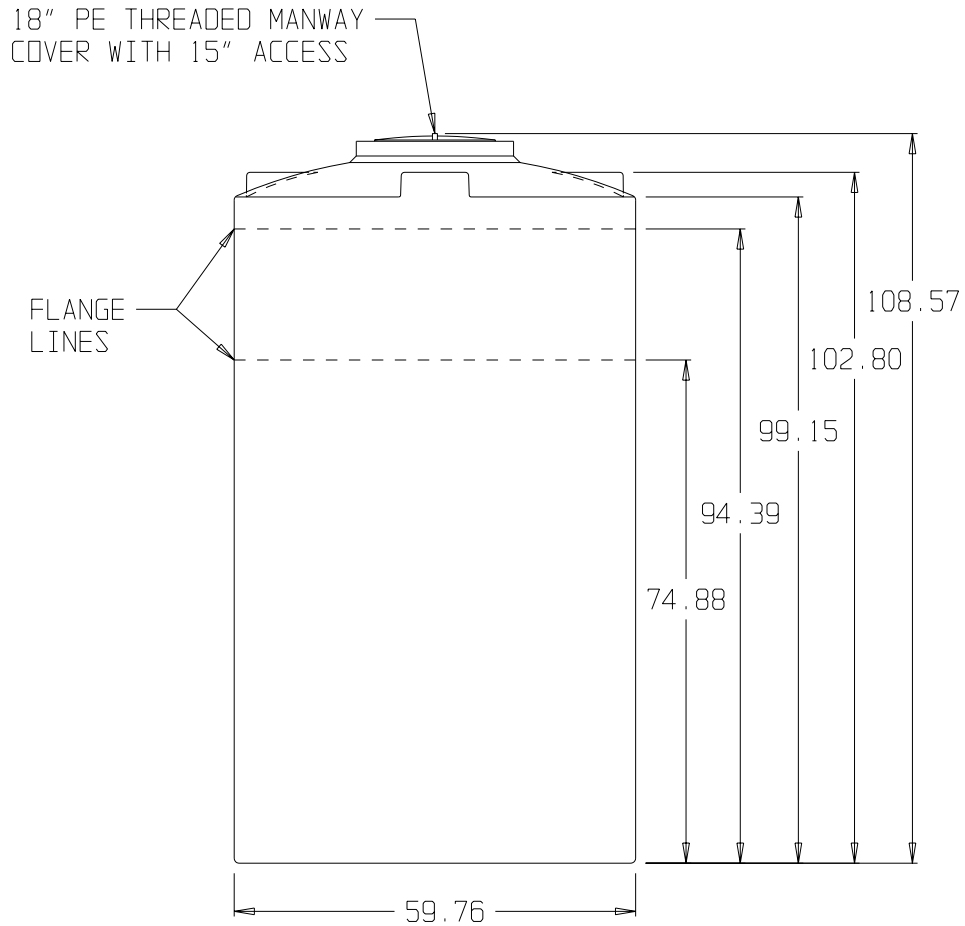

SNYDER INDUSTRIES INC.

(all dimensions in inches)

ALL FITTINGS ARE INSTALLED THEN REMOVED AND REPLACED IN ORDER TO ELIMINATE DAMAGE IN SHIPMENT

PART # TANK: H183020000__

1,200 GALLON FLAT BOTTOM TANK

REF#: 0000 09/21/01