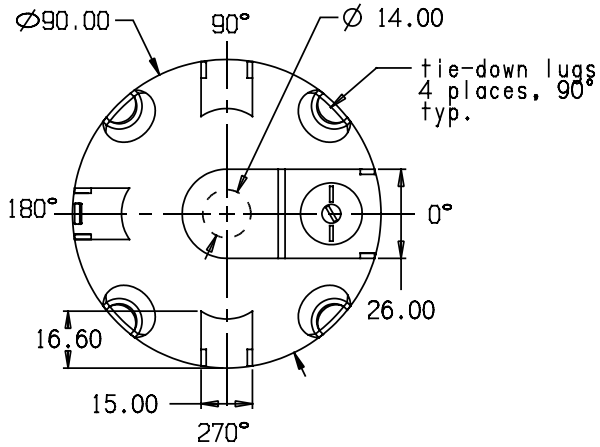

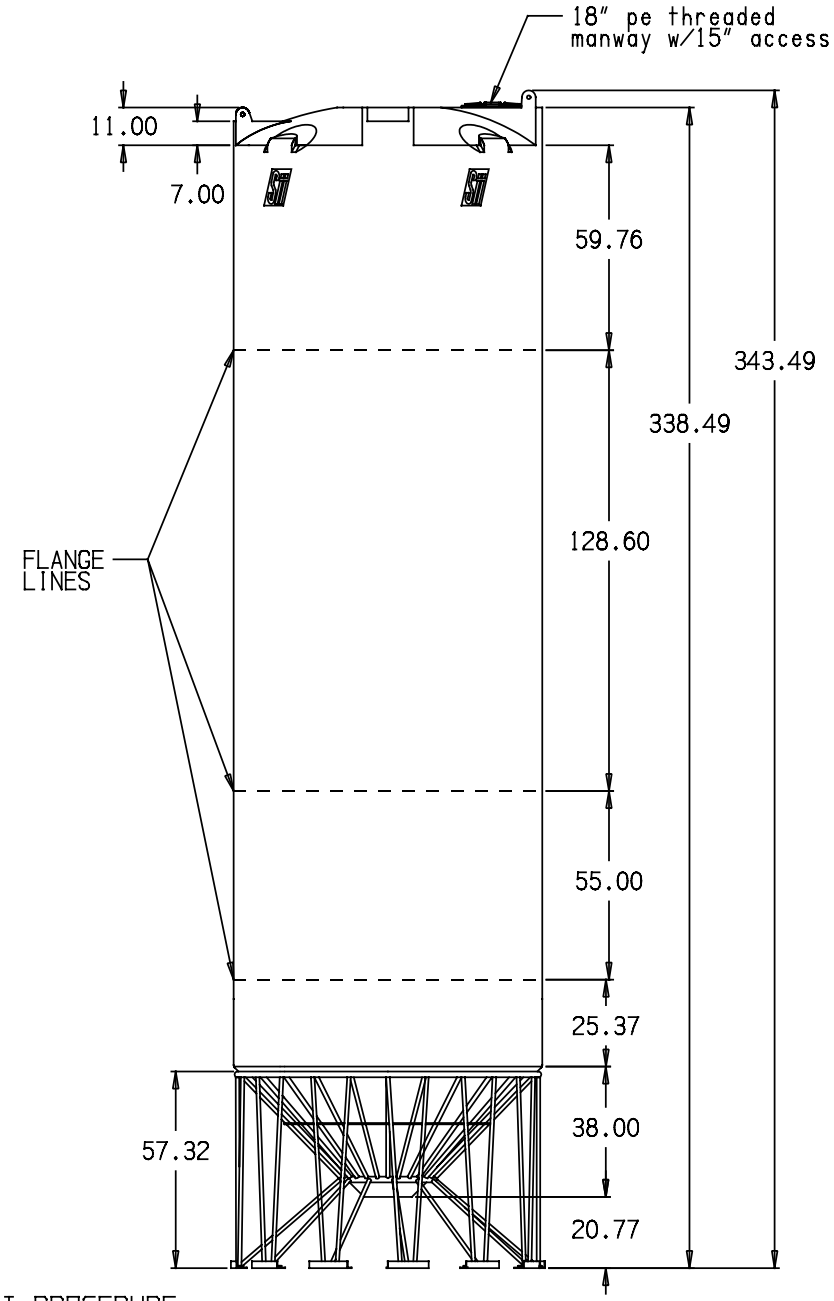

* BASE FITTINGS TO BE LEFT INSTALLED AT TIME OF SHIPMENT PER SII PROCEDURE
* Consult Snyder's Guidelines for Use and Installation prior to delivery.
  Available on-line at www.snydernet.com

(all dimensions in inches)

950 CUBIC FOOT 45° CONE BOTTOM SILO W/STAND

PART #S SILO: 7260000N-- (L)

STAND: 79400000

REF#: 00000 02/23/05

SNYDER INDUSTRIES INC.