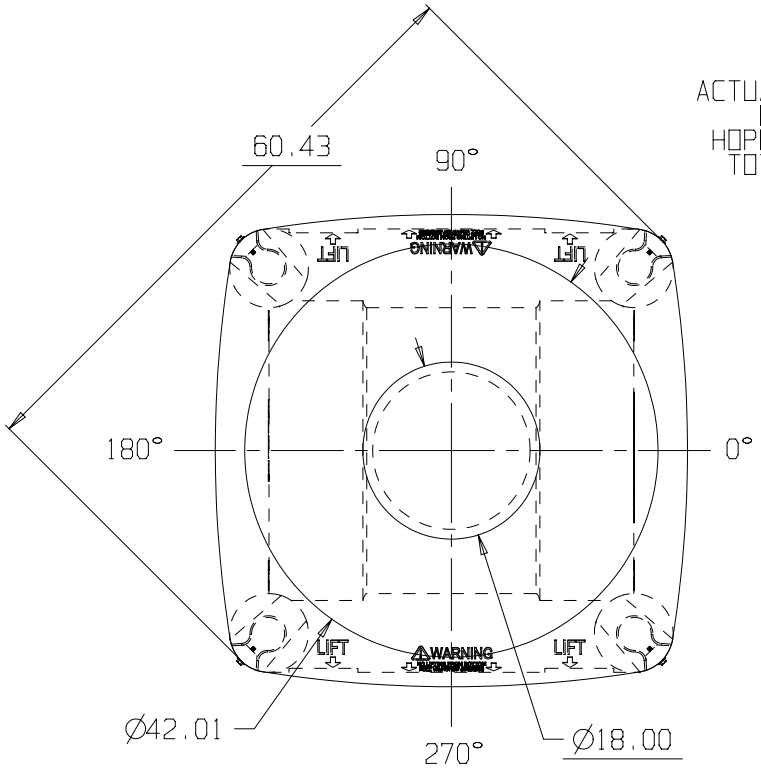

ACTUAL CAPACITY
BIN: 69.6 CF
HOPPER: 8.9 CF
TOTAL: 78.5 CF

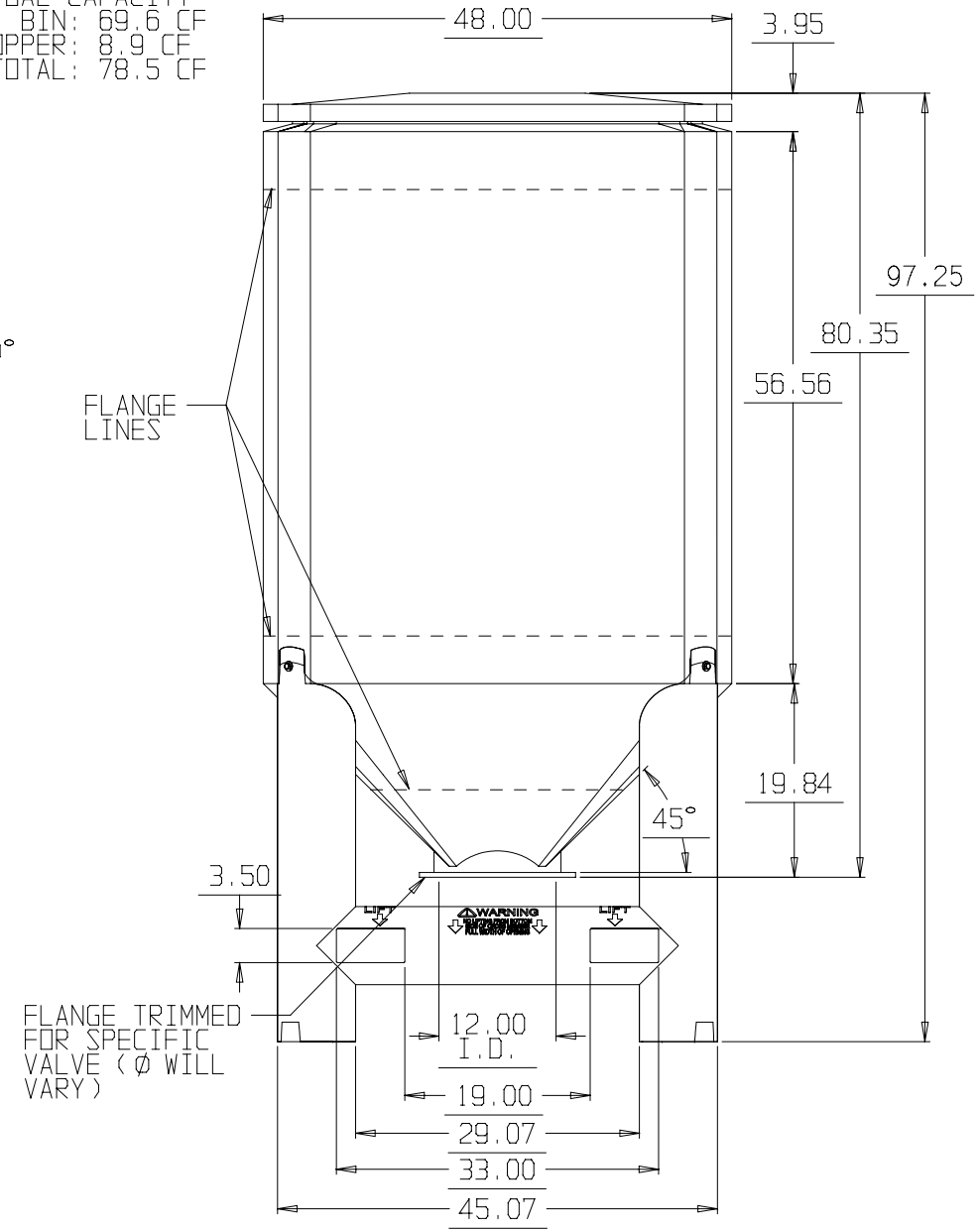

SNYDER INDUSTRIES INC.

* BASE FITTINGS TO BE LEFT INSTALLED AT TIME OF SHIPMENT PER SII PROCEDURE
* Consult Snyder's Guidelines for Use and Installation prior to delivery.
  Available on-line at www.snydernet.com

(all dimensions in inches)

PART #s BIN: 6370301N--L

BASE: 6390000N--L

REF#: 00000 11/12/04

80 CUBIC FOOT 45° SLOPE OPEN TOP DRY BIN W/12" Ø OUTLET, NO MANWAY & BASE