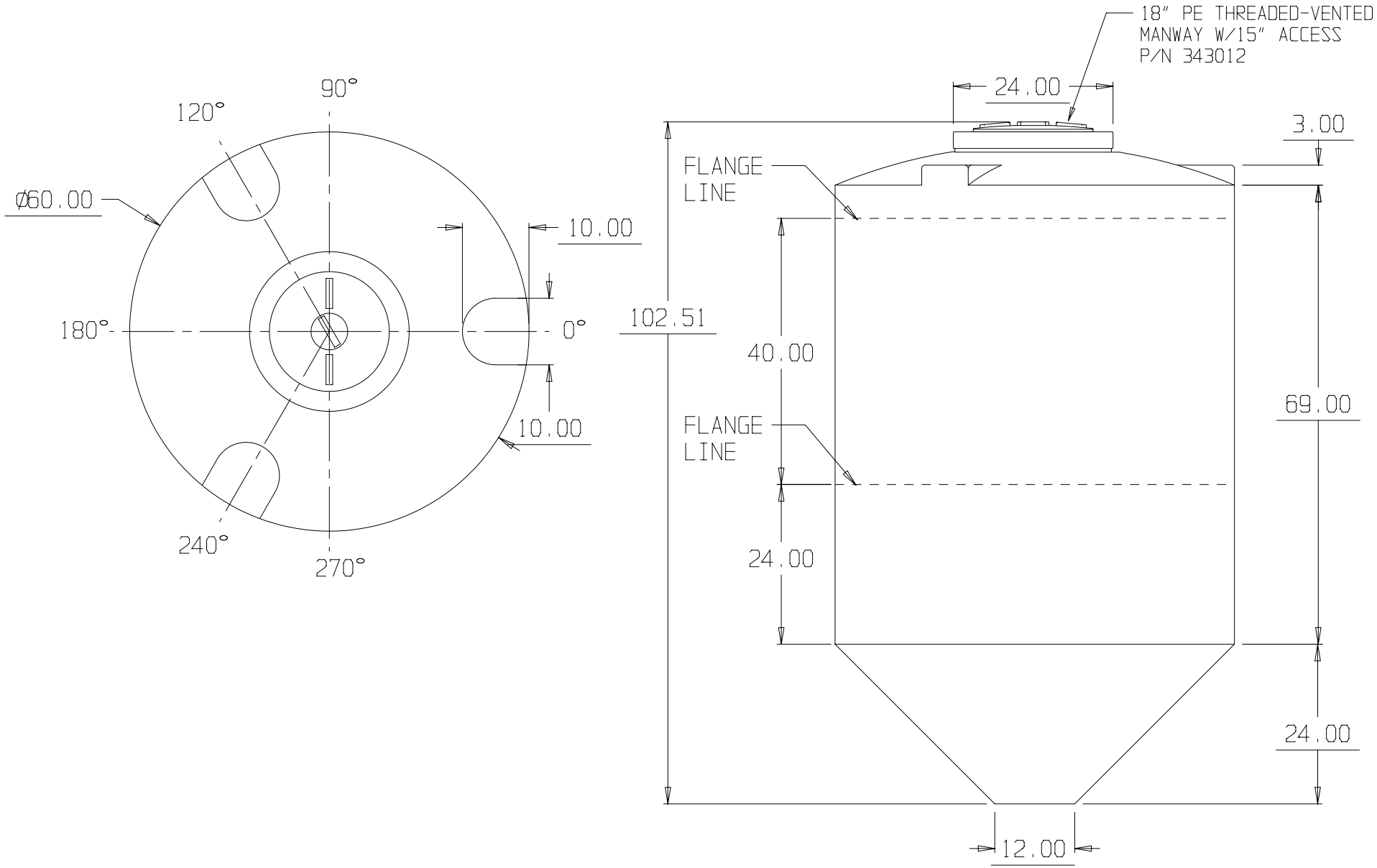

SNYDER INDUSTRIES INC.

* BASE FITTINGS TO BE LEFT INSTALLED AT TIME OF SHIPMENT PER SII PROCEDURE
* Consult Snyder's Guidelines for Use and Installation prior to delivery.
  Available on-line at www.snydernet.com

(all dimensions in inches)

PART # TANK: H189010000--

REF#: 00000 04/27/04

1000 GALLON 45° CB TANK